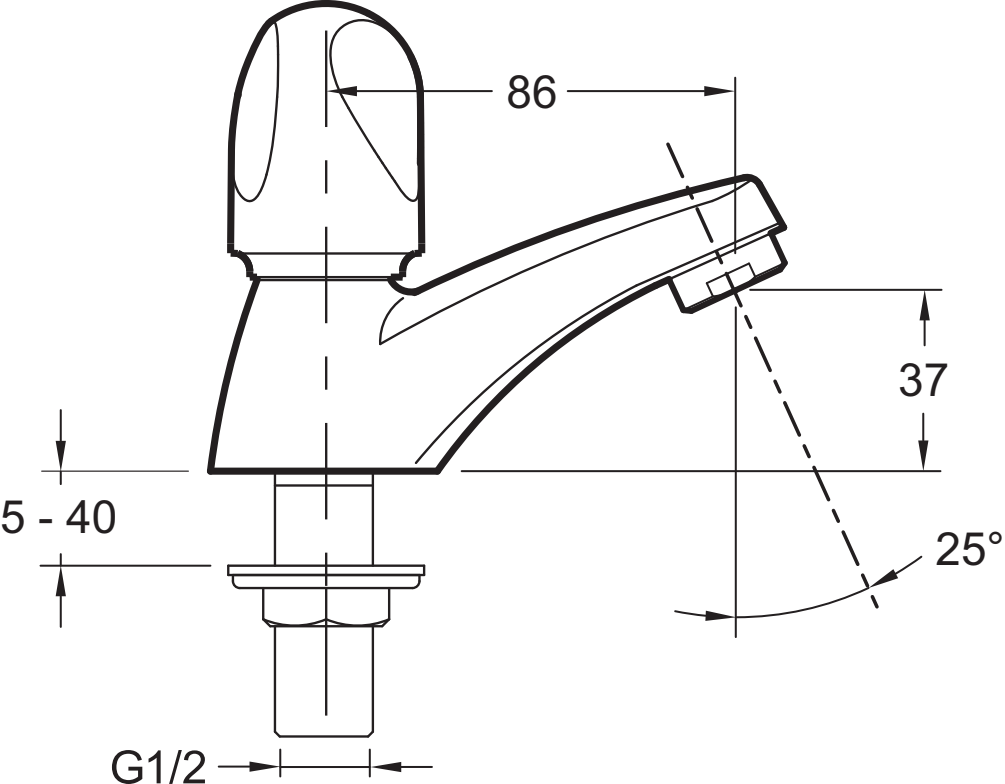
86
37
5 - 40
25°
G1/2