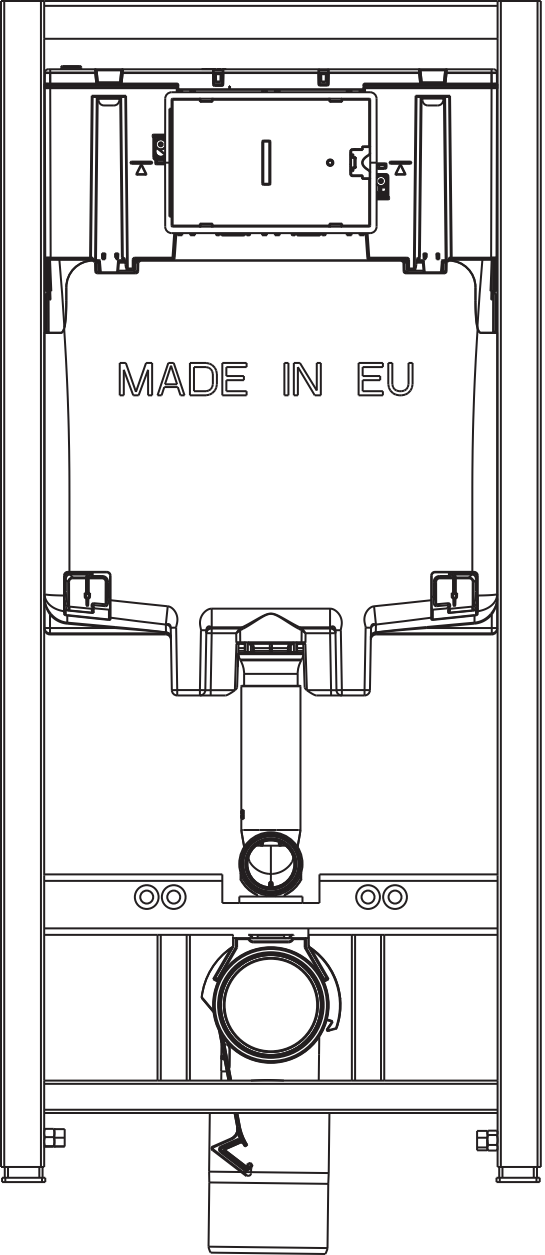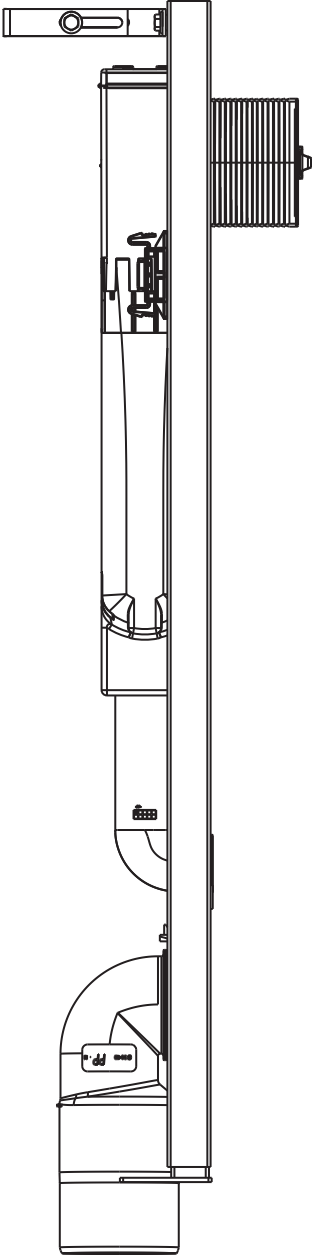
MADE IN EU